ECLIPSE XL

Our most popular cabinets just got better...

Imagine a place for everything, and everything in its place. The newest editions of our incredibly popular Eclipse XL & Nova XL units give you just that.

On first sight you'll be impressed by how solid they are, opening to reveal storage for, not just one, but two machines, and plenty of removable transparent stowage ideas too.

Your machine is seated on our 3-step Air-lifter, and both are fitted with out largest Maxi opening (size 1942), which can accommodate almost all domestic sewing machines. When fully opened they offer well supported work areas either side of the user and to the rear of the machine to prevent material falling to the floor. Gone are the days of chairs placed around you to hold your fabric up!

Able to store an overlocker & a sewing machine!

Available in:

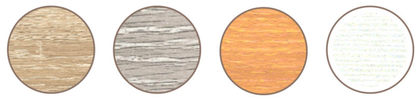

Weathered Oak | American Grey Oak | Beech | White

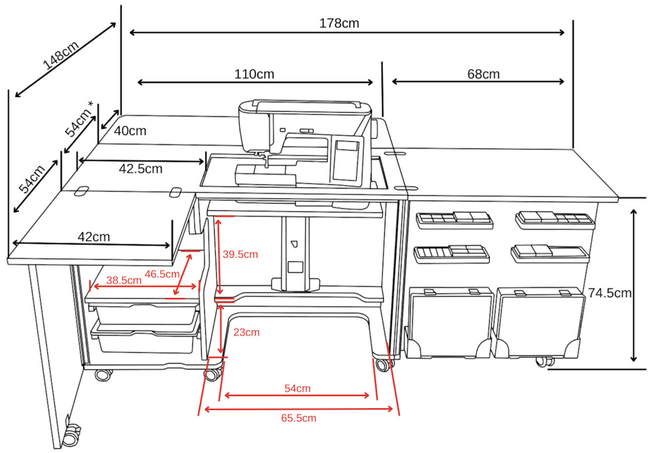

* 56cm with back flap in down position

Fully Closed
W 110cm (43 ¼")
D 56cm (22" - Including drop leaf flap down)
H 76cm (30")

Need a chair? See pg.38-39 for more information

1. Fitted with our Maxi Air-Lifter opening (type 1942) which is capable of accommodating virtually all domestic sewing machines.
2. Arrives fitted with our 3-step Maxi Air-Lift mechanism.
3. Transparent, removable door storage bins that sits under one of the expansion leaves.
4. Extendable working areas to the side and rear of the cabinet have a sturdy design with supporting double gate legs for the rear leaf and an extra support arm below the left hand leaf on the Eclipse XL, and the right hand side on the Nova XL.
5. A lockable front door secures the whole front of the cabinet.
6. An acrylic flatbed inset plate is supplied with these models, cut to fit your specific sewing machine.

Delivered fully assembled

For more delivery info please see pg.43 for details.